Swivel transport castor 200 mm, black rubber, plain bearing, plate 135x110 mm, 230 kg, product code 62393

Swivel transport castor with black rubber tread, wheel diameter 200 mm, on plain bearing. It carries 230 kg dynamic and 280 kg static, mounted on a 135x110 mm top plate with hole distance 105x80 mm.



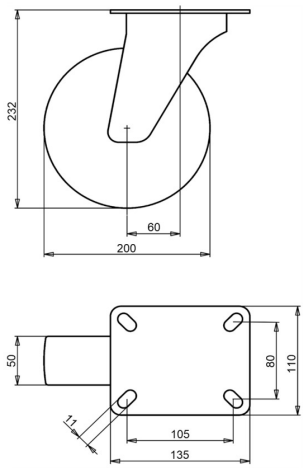

Drawing number **2-240 ISO** | Product code **62393** | EAN **3838461623936**

Type	Swivel transport castor
Wheel diameter	200 mm
Wheel width	50 mm
Tread	black rubber tread, 80 Shore A
Tread colour	black
Wheel centre	steel, zinc electroplated, Cr(VI)-free
Bearing	plain bearing
Load capacity, dynamic	230 kg
Load capacity, static	280 kg
Top plate	135x110 mm
Hole distance	105x80 mm
Fixing hole diameter	11 mm
Overall height	232 mm
Offset	60 mm
Weight	3.9 kg
Temperature, continuous	-20 to +70 °C
Temperature, short exposure (max. 10 min)	-30 to +80 °C

Fork zinc electroplated and Cr(VI)-free. Tread free of PAH (EU directive 2005/69/EC). Tested to EN 12532.

Properties and use

Steers easily and copes with uneven floors and obstacles. Steel rim and rubber tyre make a strong wheel. On request: other wheel and tyre colours, and an electrically conductive or antistatic tyre (ESD).

Send us the drawing or the dimensions of the castor you are replacing and we confirm the match. Quote within 1 to 2 working days.

Specifications from the LIV product database, October 2026.