Swivel transport castor 125 mm, black rubber, roller bearing, plate 105x85 mm, 130 kg, product code 59319

Swivel transport castor with a 125 mm wheel, black rubber tread, on roller bearing. It carries 130 kg dynamic and 160 kg static, mounted on a 105x85 mm top plate with hole distance 80x60 mm.



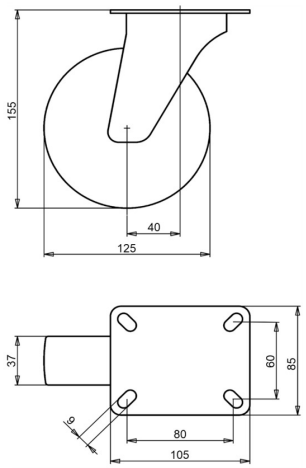

Drawing number **2-587 ISO** | Product code **59319** | EAN **3838461593192**

Type	Swivel transport castor
Wheel diameter	125 mm
Wheel width	37 mm
Tread	black rubber tread, 80 Shore A
Tread colour	black
Wheel centre	steel, zinc electroplated, Cr(VI)-free
Bearing	roller bearing
Load capacity, dynamic	130 kg
Load capacity, static	160 kg
Top plate	105x85 mm
Hole distance	80x60 mm
Fixing hole diameter	9 mm
Overall height	155 mm
Offset	40 mm
Weight	1.3 kg
Temperature, continuous	-20 to +70 °C
Temperature, short exposure (max. 10 min)	-30 to +80 °C

Fork zinc electroplated and Cr(VI)-free. Tread free of PAH (EU directive 2005/69/EC). Tested to EN 12532.

Properties and use

Steers easily and copes with uneven floors and obstacles. Steel rim and rubber tyre make a strong wheel. On request: other wheel and tyre colours, and an electrically conductive or antistatic tyre (ESD).

Send us the drawing or the dimensions of the castor you are replacing and we confirm the match. Quote within 1 to 2 working days.

Specifications from the LIV product database, October 2026.