# Swivel castor 180 mm, grey rubber, plain bearing, plate 135x110 mm, 200 kg, product code 39405

Swivel castor with a 180 mm wheel, grey rubber tread, on plain bearing. It carries 200 kg dynamic and 250 kg static, mounted on a 135x110 mm top plate with hole distance 105x80 mm.



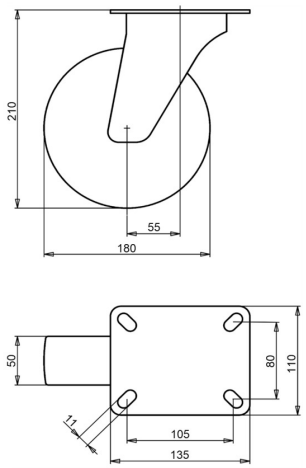


Drawing number **2-926 ISO** | Product code **39405** | EAN **3838461394058**

| | |
|---|---|
| **Type** | Swivel castor |
| **Wheel diameter** | 180 mm |
| **Wheel width** | 50 mm |
| **Tread** | grey rubber tread, 83 Shore A |
| **Tread colour** | grey |
| **Wheel centre** | polypropylene |
| **Bearing** | plain bearing |
| **Load capacity, dynamic** | 200 kg |
| **Load capacity, static** | 250 kg |
| **Top plate** | 135x110 mm |
| **Hole distance** | 105x80 mm |
| **Fixing hole diameter** | 11 mm |
| **Overall height** | 210 mm |
| **Offset** | 55 mm |
| **Weight** | 2.7 kg |
| **Temperature, continuous** | -20 to +70 °C |
| **Temperature, short exposure (max. 10 min)** | -30 to +80 °C |

Fork zinc electroplated and Cr(VI)-free. Tread free of PAH (EU directive 2005/69/EC). Tested to EN 12532.

## Properties and use

The grey rubber does not leave marks on the floor. The tyre damps vibration and noise, and the wheel works indoors and outdoors. On request: other wheel and tyre colours, and an electrically conductive or antistatic tyre (ESD).

Send us the drawing or the dimensions of the castor you are replacing and we confirm the match. Quote within 1 to 2 working days.

Specifications from the LIV product database, October 2026.