Swivel transport castor 80 mm, black rubber, plain bearing, plate 105x85 mm, 65 kg, product code 31113

Swivel transport castor with a 80 mm wheel, black rubber tread, on plain bearing. It carries 65 kg dynamic and 80 kg static, mounted on a 105x85 mm top plate with hole distance 80x60 mm.



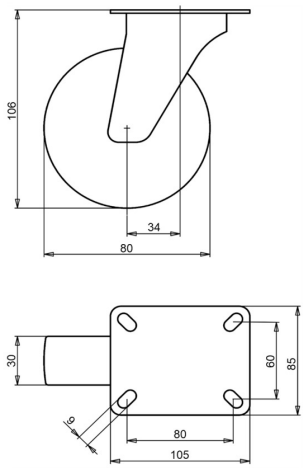

Drawing number **2-921 ISO** | Product code **31113** | EAN **3838461311130**

Type	Swivel transport castor
Wheel diameter	80 mm
Wheel width	30 mm
Tread	black rubber tread, 80 Shore A
Tread colour	black
Wheel centre	polypropylene
Bearing	plain bearing
Load capacity, dynamic	65 kg
Load capacity, static	80 kg
Top plate	105x85 mm
Hole distance	80x60 mm
Fixing hole diameter	9 mm
Overall height	106 mm
Offset	34 mm
Weight	0.85 kg
Temperature, continuous	-20 to +70 °C
Temperature, short exposure (max. 10 min)	-30 to +80 °C

Fork zinc electroplated and Cr(VI)-free. Tread free of PAH (EU directive 2005/69/EC). Tested to EN 12532.

Properties and use

Suited to wet floors and low obstacles. The rubber tyre damps vibration and noise. On request: other wheel and tyre colours, and an electrically conductive or antistatic tyre (ESD).

Send us the drawing or the dimensions of the castor you are replacing and we confirm the match. Quote within 1 to 2 working days.

Specifications from the LIV product database, October 2026.