Swivel transport castor with total lock 100 mm, black rubber, plain bearing, plate 105x85 mm, 80 kg, product code 30303

Swivel transport castor with total lock with a 100 mm wheel, black rubber tread, on plain bearing. It carries 80 kg dynamic and 100 kg static, mounted on a 105x85 mm top plate with hole distance 80x60 mm. The total lock brakes the rotation of the wheel and the swivel head.



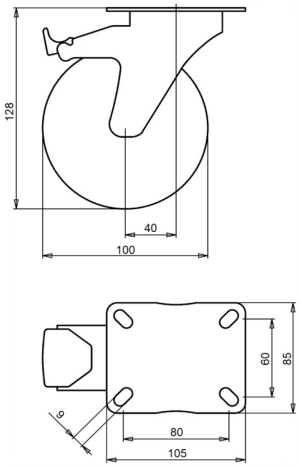

Drawing number **2-622 A** | Product code **30303** | EAN **3838461303036**

Type	Swivel transport castor with total lock
Wheel diameter	100 mm
Wheel width	32 mm
Tread	black rubber tread, 80 Shore A
Tread colour	black
Wheel centre	steel, zinc electroplated, Cr(VI)-free
Bearing	plain bearing
Load capacity, dynamic	80 kg
Load capacity, static	100 kg
Top plate	105x85 mm
Hole distance	80x60 mm
Fixing hole diameter	9 mm
Overall height	128 mm
Offset	40 mm
Brake	total lock (locks wheel and swivel)
Weight	1 kg
Temperature, continuous	-20 to +70 °C
Temperature, short exposure (max. 10 min)	-30 to +80 °C

Fork zinc electroplated and Cr(VI)-free. Tread free of PAH (EU directive 2005/69/EC). Tested to EN 12532.

Properties and use

Steers easily and copes with uneven floors and obstacles. Steel rim and rubber tyre make a strong wheel. On request: other wheel and tyre colours, and an electrically conductive or antistatic tyre (ESD).

Send us the drawing or the dimensions of the castor you are replacing and we confirm the match. Quote within 1 to 2 working days.

Specifications from the LIV product database, October 2026.